英飞凌CoolGaN™赋能AI数据中心

英飞凌科技 消费、计算与通讯业务
程文涛

目录

1 AI 服务器电源趋势与需求 3

2 英飞凌CoolGaN™赋能下一代AI服务器SMPS 8

3 参考设计 14

4 回顾与总结 16

Copyright © Infineon Technologies AG 2025. All rights reserved.

目录

1 **AI 服务器电源趋势与需求** 3

2 英飞凌CoolGaN™赋能下一代AI服务器SMPS 7

3 参考设计 13

4 回顾与总结 15

Copyright © Infineon Technologies AG 2025. All rights reserved.

AI 系统需要更高的功率，从而支持更多的半导体器件

x86 and ARM-based processor electricity demand

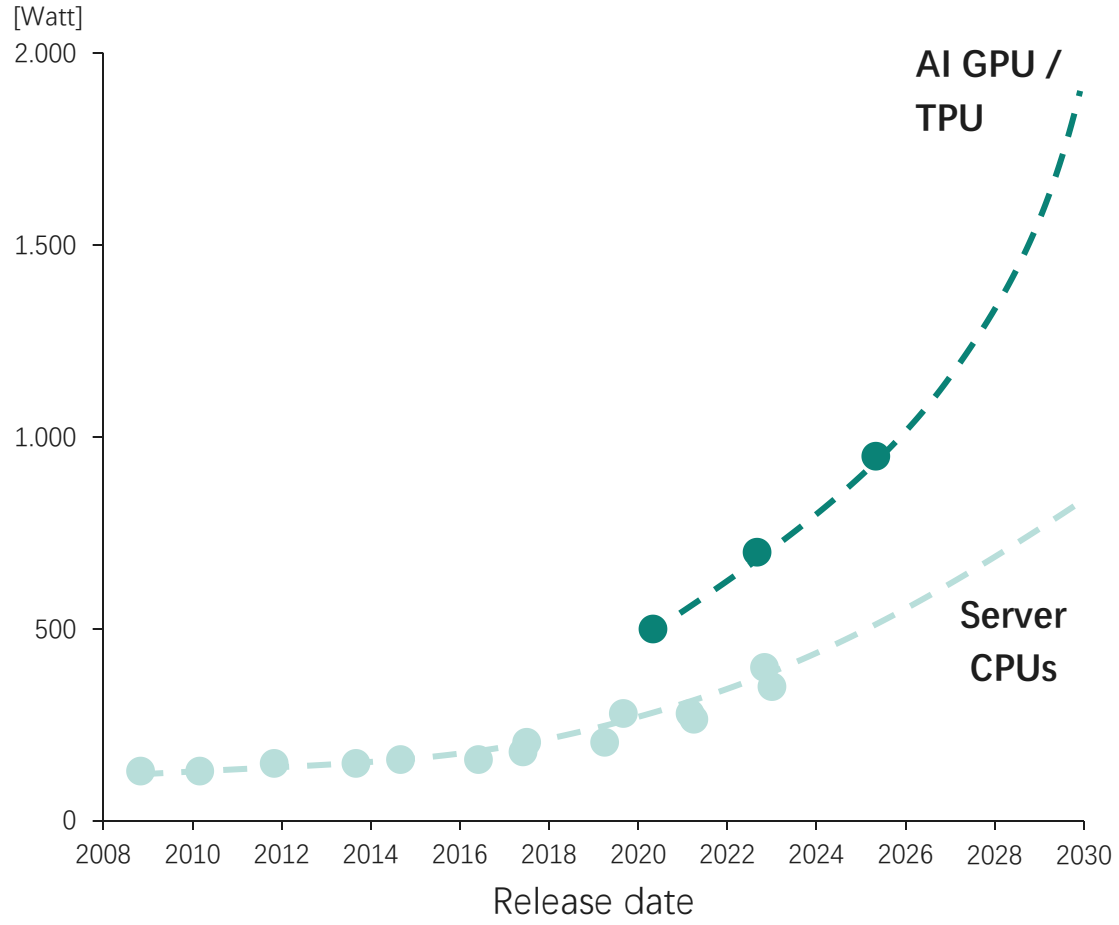

Semiconductor SAM CAGR[1]

AI Training GPU / TPU

Unit CAGR[1] **>40%**
Avg. BOM CAGR[1] **>10 %**

>50%

Other Servers

Unit CAGR[1,2] **6%**
BOM CAGR[1,2] **<10%**

~15%

Source: Company information; Infineon analysis
[1] CAGR 2023-2027 in Infineon relevant market
[2] Incl. AI inference

Copyright © Infineon Technologies AG 2025. All rights reserved.

交流电压分布的潜在架构

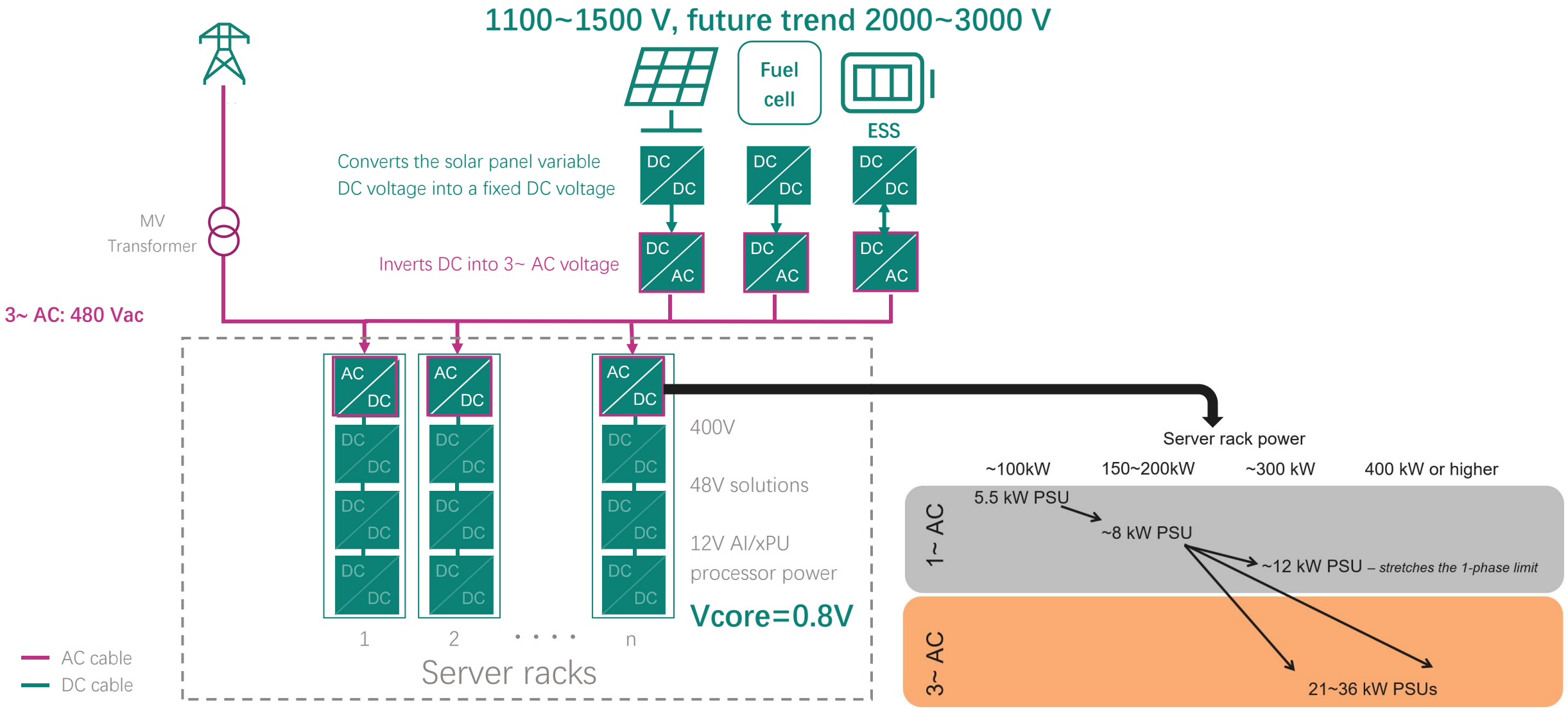

Copyright © Infineon Technologies AG 2025. All rights reserved.

AI 需要 PSU 更高的峰值功率和瞬态动力

- GPU draws high peak power and high load transient ➔ LLC stage must deliver
- **Higher LLC switching frequency** needed to increase the control loop bandwidth

➔ **CoolGaN™ are enablers for high switching frequency**

Spec of EDPP load for AC/DC AI power

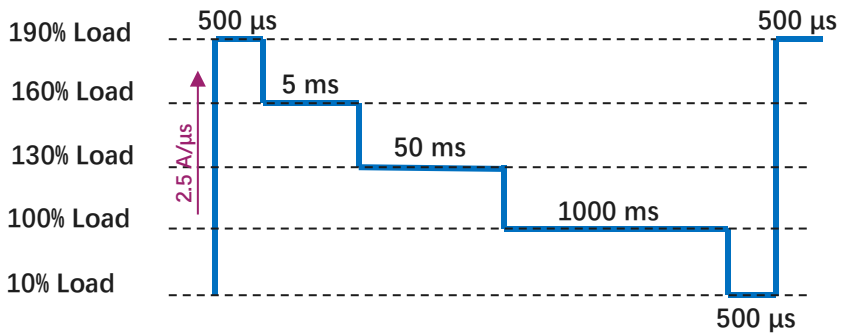

- EDPP= Electrical Data Peak Process

ORv3-HPR

Peak power specs according to GPU spec

50ms	400µs
136%	160%

Copyright © Infineon Technologies AG 2025. All rights reserved.

目录

1 AI 服务器电源趋势与需求 3

2 **英飞凌CoolGaN™赋能下一代AI服务器SMPS** **7**

3 参考设计 13

4 回顾与总结 15

Copyright © Infineon Technologies AG 2025. All rights reserved.

技术比较总结：Si vs. SiC vs. GaN

Device	$V_{(BR)DSS}$ [V]	$R_{DS(on)}*E_{oss}$	$R_{DS(on)}*Q_g$	$R_{DS(on)}*Q_{oss}$	$R_{DS(on)}*Q_{rr}$
CoolMOS™ C7	600	100%	100%	100%	100%
CoolGaN™	600	84%	6%	13%	0%
CoolSiC™	650	133%	41%	21%	2%

Hard switching

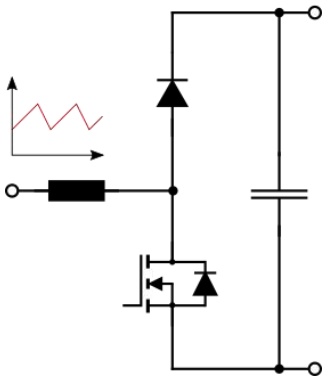

Soft switching

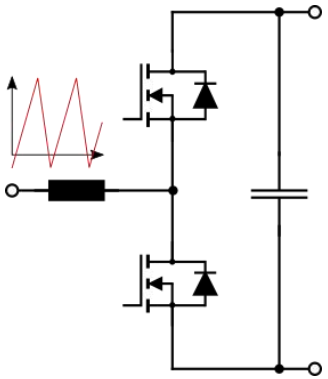

Hard switching

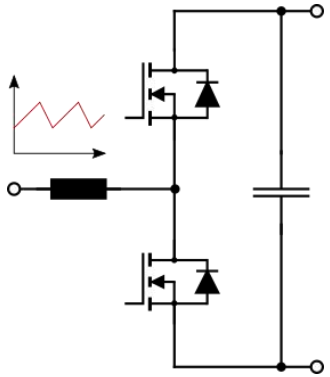

Copyright © Infineon Technologies AG 2025. All rights reserved.

第一代/第二代 AI PSU
1-ph 277 Vac or 347 Vac, 功率增加至 5.5 kW 和 8 kW

PSU Block Diagram

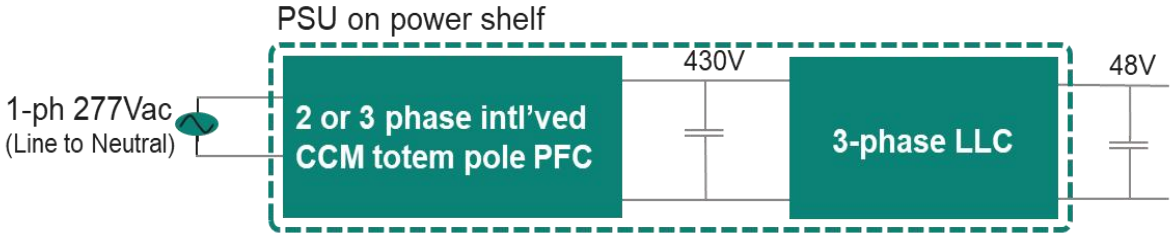

PSU Block Diagram

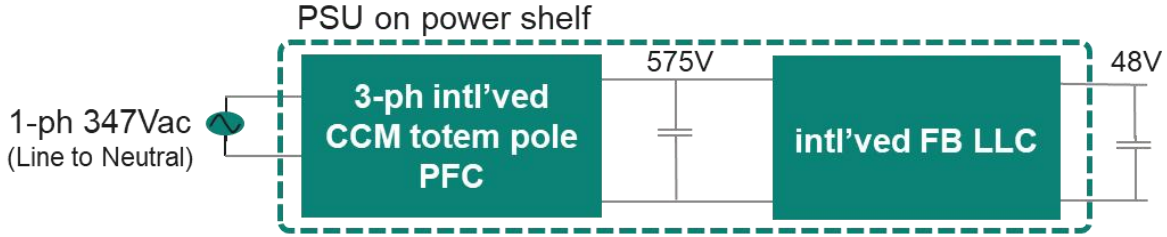

Schematic of Power Topology

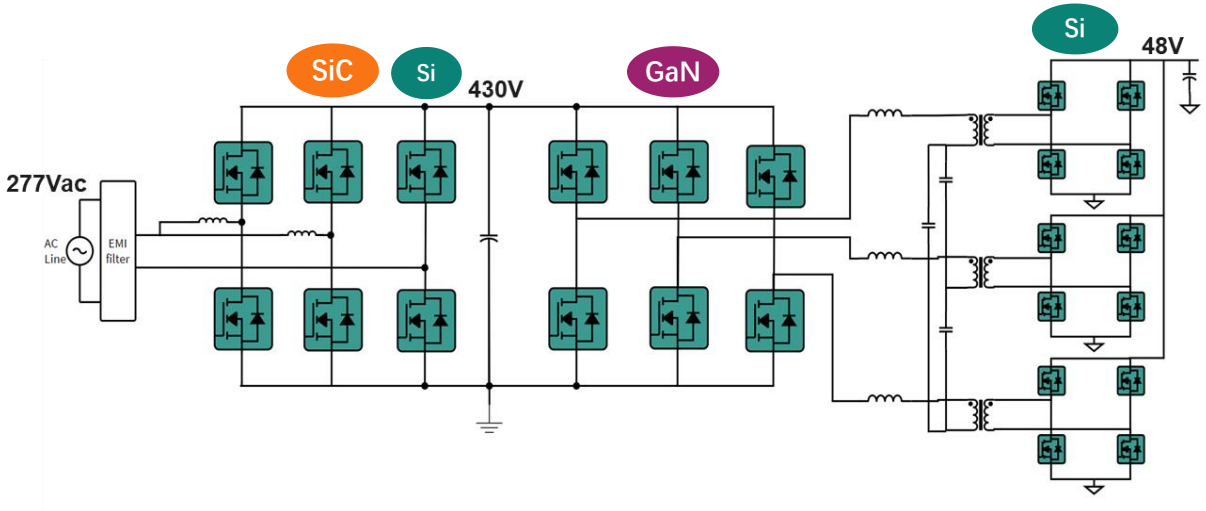

- SiC for CCM TP PFC, GaN for LLC

Schematic of Power Topology

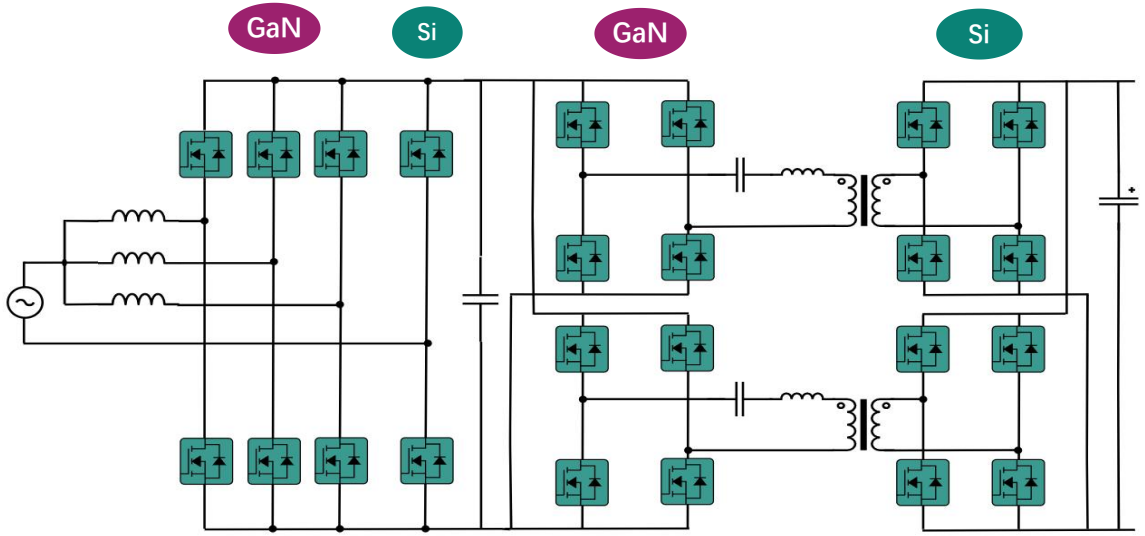

- GaN for TCM TP PFC, GaN for LLC

Copyright © Infineon Technologies AG 2025. All rights reserved.

第三代 AI PSU
3-ph 480Vac 架构和 380V 电压分布，功率达到 22 kW

PSU Block Diagram

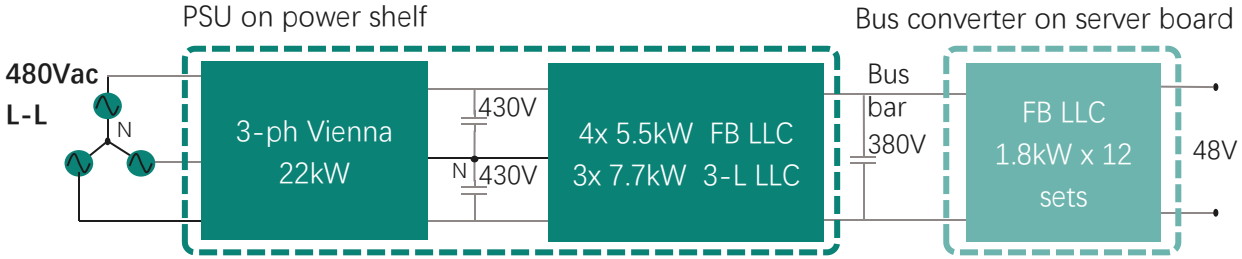

PSU Block Diagram

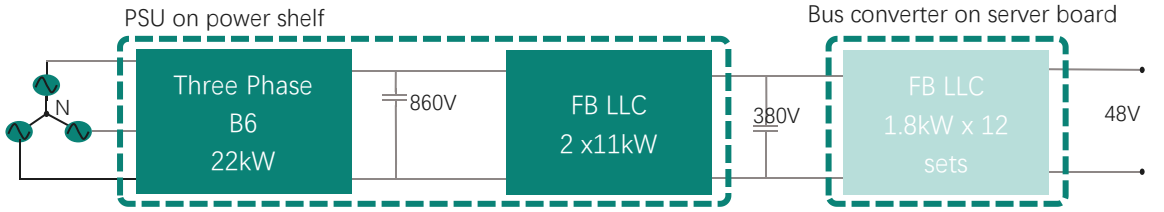

Schematic of Power Topology

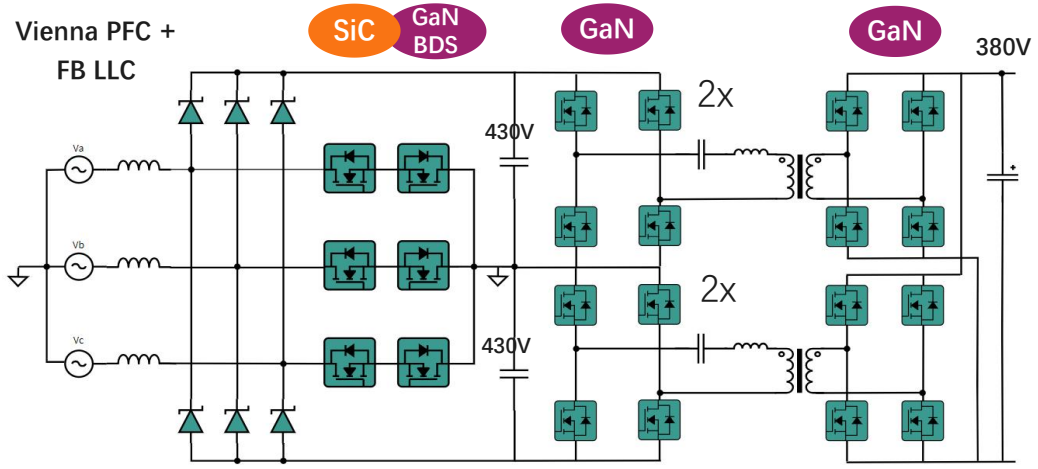

Schematic of Power Topology

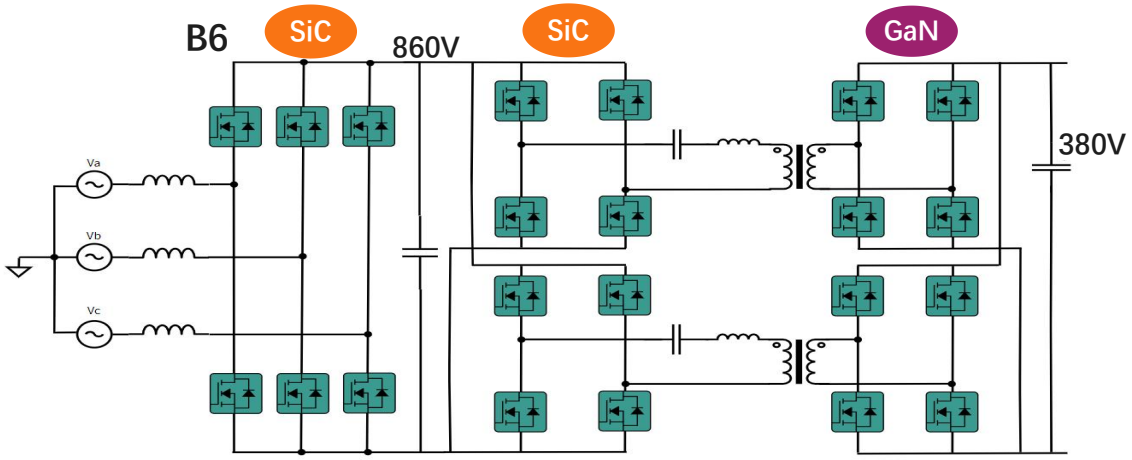

- SiC or GaN BDS for CCM TP PFC, GaN for LLC
- SiC for B6 PFC, and LLC pri, GaN for LLC sec.

Copyright © Infineon Technologies AG 2025. All rights reserved.

Benefits of GaN Per 10 Racks in a Data Center

$3M profit increase per year

100 metric tons CO_2 reduction per year

$13k OPEX reduction per year

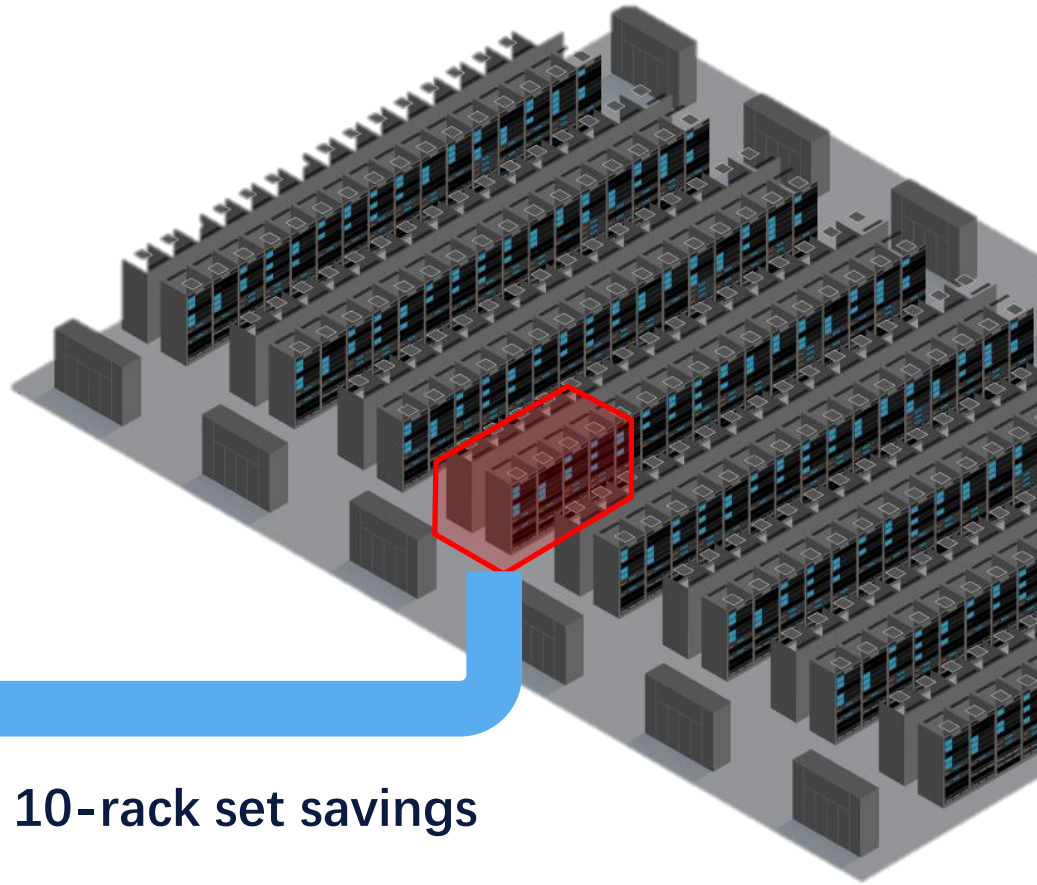

10-rack set savings

300 mm GaN 带来的好处

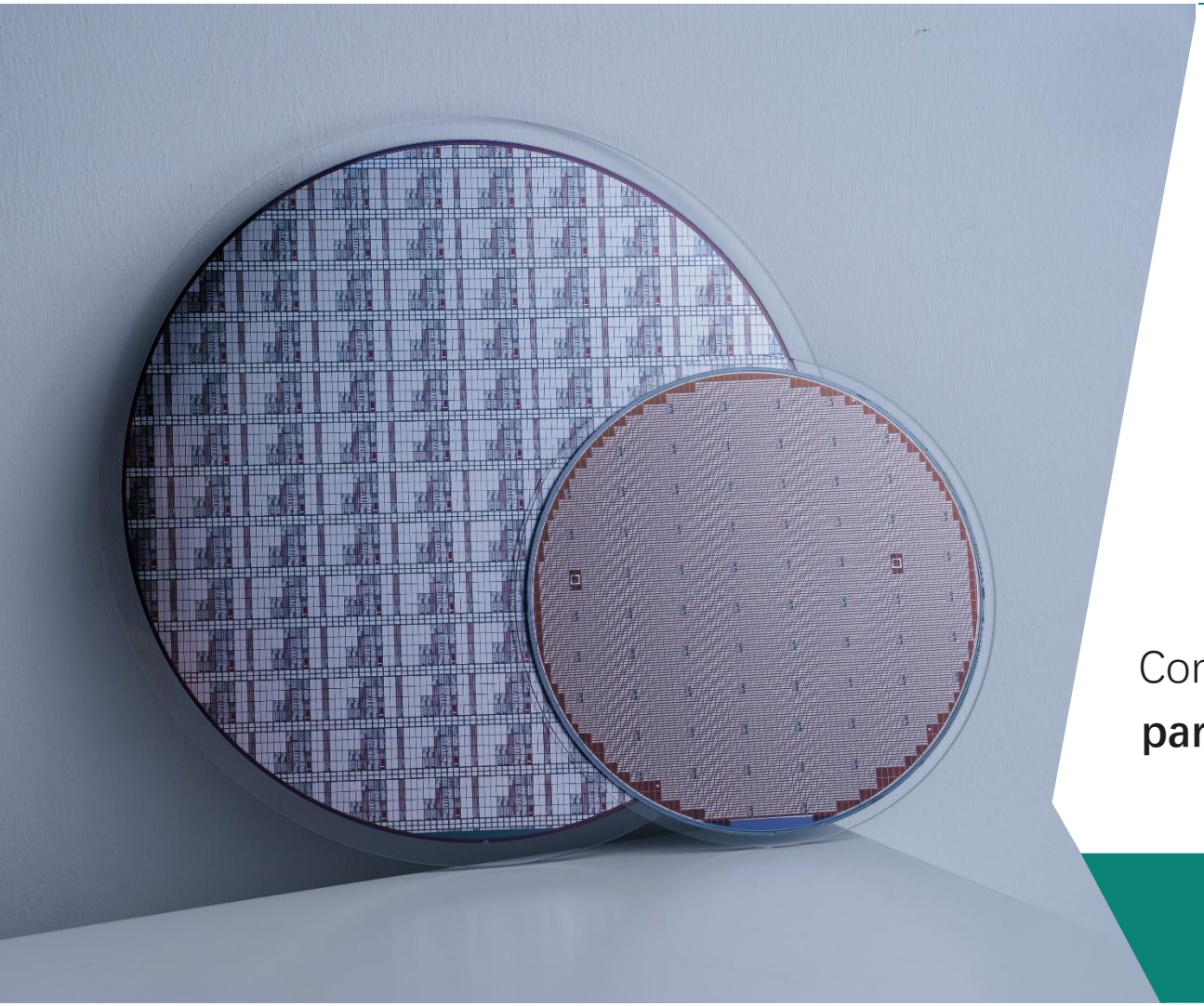

Higher system performance &
increased cost-effectiveness
through GaN technology

Contribute to **achieving cost parity with silicon** over time

Supply stability
for business continuity

Superior Value Proposition

Copyright © Infineon Technologies AG 2025. All rights reserved.

目录

1 AI 服务器电源趋势与需求 3

2 英飞凌CoolGaN™赋能下一代AI服务器SMPS 7

3 **参考设计** **13**

4 回顾与总结 15

Copyright © Infineon Technologies AG 2025. All rights reserved.

8 kW PSU参考板
含CoolMOS™、CoolSiC™ 和 CoolGaN™

upcoming

REF_8KW_HFHD_PSU

Si SiC GaN

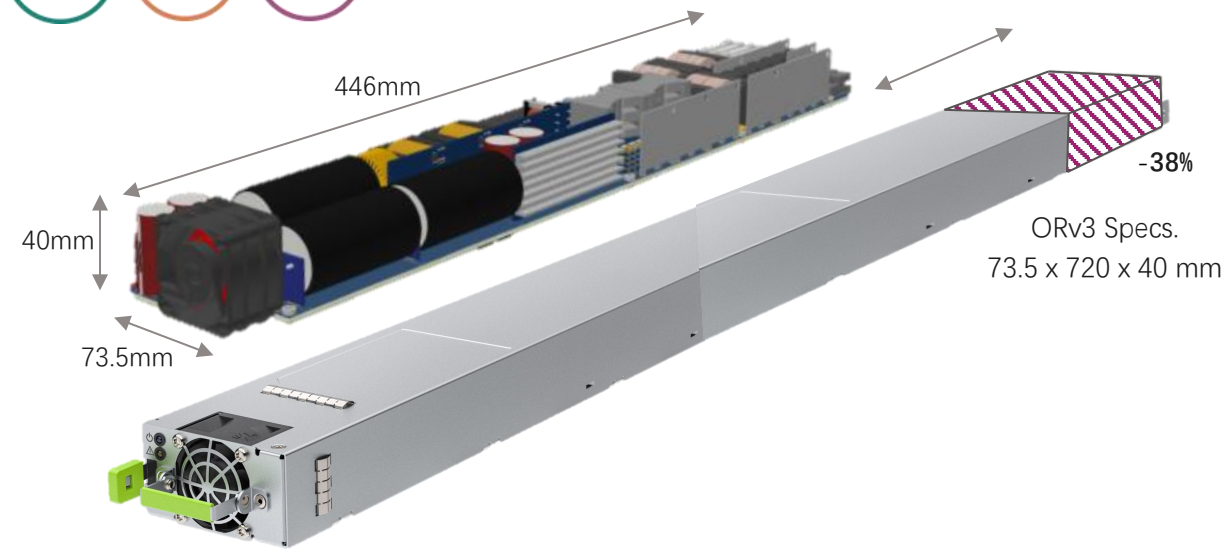

Technical details

Input voltage range	180 V_{AC} ~ 275 V_{AC}	
Output voltage	50 V_{DC} nominal	
Output power max	8000 W	
Efficiency	~ 98%	
Power factor (load > 10%)	PF > 0.98, 20%→80% load iTHD < 10%, 20%→80% load	@ 180 ~ 275 V_{AC}
Temperature Ambient	0°C to 40°C	

Learn More

Infineon components	*8x IGT65R025D2, 8x IMT65R040M2H, 4x IMT65R010M2H, 4x IPT60R016CM8, 2x IPT60R050G7, 2x IDL12G65C5, 1x IPT60R022S7, 60x IQE03xN08LM6, 10x ISC018N08NM6* *1EDB8275F, 1EDN8511B, 2EDB9259Y, 1EDN8550B* *BAT46WJ, BAT165, BSS138N* *ICE2QR2280G,* *TLS4120D0EPV33, 4DIR1400H*
Controller	*XMC4200*

Features

- Full IFX BOM content including CoolMOS™, CoolSiC™, CoolGaN™ and OptiMOS™
- Novel integrated planar magnetic construction
- Hold-up time extension
- Full digital control (PFC and DCDC)
- Interleaved Totem-Pole PFC + Full-Bridge GaN LLC

Benefits

- Target 98% peak efficiency
- Power density 100W/in³ (-**38% volume vs ORv3 specification**)
- **Hold up time extension circuit for 20ms @100% Load**
- 400kHz LLC switching frequency enabled with GaN
- Based on 2x REF_3K3W_HDHF_PSU reference board

Copyright © Infineon Technologies AG 2025. All rights reserved.

目录

1 AI 服务器电源趋势与需求 3

2 英飞凌CoolGaN™赋能下一代AI服务器SMPS 7

3 参考设计 13

4 **回顾与总结** **15**

Copyright © Infineon Technologies AG 2025. All rights reserved.

回顾与总结

- AI servers show significant higher power trend, and possibly new rack architecture and cooling.
- AI server SMPS higher power is reached by scaling up the number of interleaved stages and using lower Rds_on devices.
- Further higher power requirement will push the SMPS to 3-Phase topologies (e.g.: Vienna) and higher DC voltage distribution (ex: 400V).
- Top side cooling packages can be an enabler for new cold plate liquid cooled SMPS.
- **Infineon CoolGaN™ Leads the Way in Next-Generation AI Server SMPS Together with Si and SiC Power Technologies**

Copyright © Infineon Technologies AG 2025. All rights reserved.

infineon